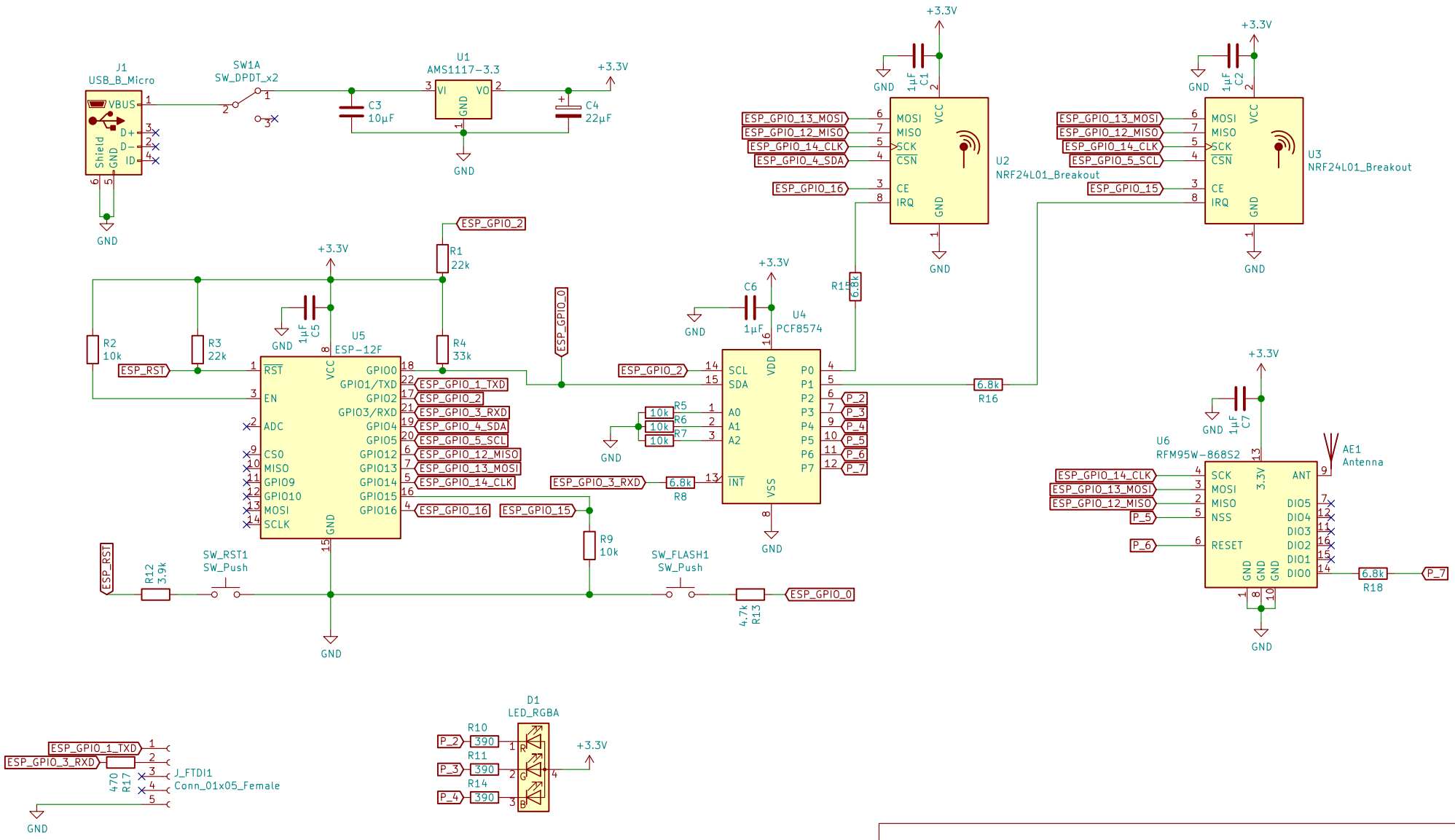

/!\ R8 must be changed to a lower value like
100 Ohm if using the nodemcu dev board instead of a bare bone ESP-12F

ESP_GPIO_10 can only be used in DIO mode /!\

www.web-directories.hd.free.fr

Sheet: /
File: ESP8266_dual_NRF24l01_gateway.sch

Title: ESP8266 Dual NRF24L01 Gateway

Size: A4	Date: 2025-11-04	Rev: 1.3
KiCad E.D.A. kicad (5.1.4)-1		Id: 1/1